VL Ring Crown 1

The pendant emits light directed primarily downwards. The opal glass provides a comfortable and uniform illumination of the area around the fixture.

Vilhelm Lauritzen

Vilhelm Lauritzen (1894–1984) is one of the most significant architects in the history of Denmark; he was the trail-blazing figurehead of Danish functionalism. A number of his buildings – Nørrebro Theatre (1931–32), Daells Varehus department store (1928–35), Radiohuset (1936-41) and the first airport built in Kastrup (1937–39) – represented the concentrated essence of contemporary life.

Set location - The Silo

louis poulsen

Design to Shape Light

louispoulsen.com

Product info

Information

Electrical: System Wattage: 15W LED Wattage: 14 W Delivered lumens: 936 Efficacy: 62.4 lm/W - Certifications: cULus, Dry Location Protection class IP20 Controllability: Phase dimming Actual performance dependent upon screw-base lamp used.

Mounting

Mounting: Canopy: White. Cord type: 2-conductor, 18 AWG cloth-covered power cord. Cord length: 12 feet.

Finish

Glossy, hand blown white opal glass. Satin polished brass, untreated.

Materials

Shades: Hand blown, 3-layered, polished opal glass. Suspension: Untreated brass, will patinate.

Sizes and weight

Width x Height x Length (in.) | 7.5 x 13.5 x 7.5 Max 3.4 lbs

Compliance

Compliance: cULus, Dry location.

Light source

1x40W A-19/medium

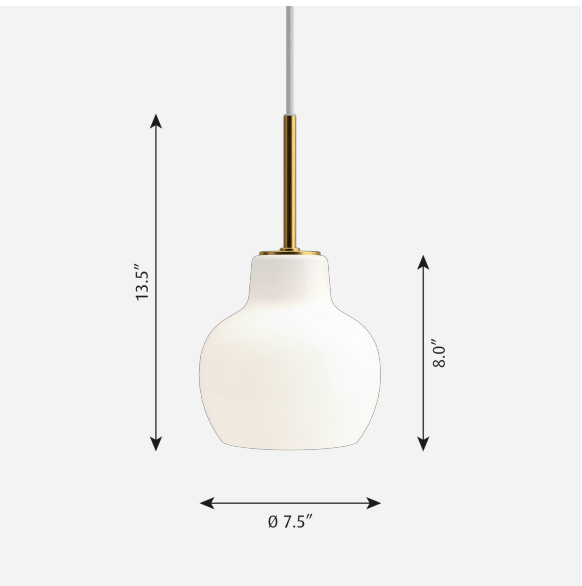

Information

Electrical:
System Wattage: 15W
LED Wattage: 14 W
Delivered lumens: 936
Efficacy: 62.4 lm/W -
Certifications:
cULus, Dry Location
Protection class IP20
Controllability: Phase dimming
Actual performance dependent upon screw-base lamp used.

Product variants

Light source	Voltage frequency
1x40W A-19/medium	120V

Product description

VL Ring Crown family derives from a lamp designed by architect Vilhelm Lauritzen for the Danish broadcasting house in Copenhagen. The VL Ring Crown 1 features a brass suspension stem supporting an opal white glass pendant with an open bottom. The brass components are untreated and will develop a patina over time. The VL Ring Crown series includes pendant rings that have 3, 5 or 7 glass shades, and a wall mounted version.

Mounting

Mounts onto a 4 inch octagonal outlet box. Canopy: brass cone profile,Glass support: die cast aluminum. Cord type: 3-conductor, 18 AWG white fabric-covered power cord. Cord length: 12 feet.

Light description

The fixture emits spherical, diffuse light and the thickness of the glass results in very comfortable light distribution. Direct view of the light source is limited by the small bottom opening to reduce glare. Provided with a medium base socket allowing the use of various color temperatures or wirelessly-controlled lamps as desired.

Design

Vilhelm Lauritzen

Material

Glass shade is opal white, handblown glass 0. 2 IN thick. Frame and canopy are brushed, untreated brass. Socket: Porcelain, medium base for A-19 size lamps. Mounting bracket is galvanized steel, 0. 06 IN thick. Glass support: die cast aluminum.

Weight

3.371

Other functions

Longer cord lengths.

Finish

Brass/glossy opal glass

Voltage

120V

Light distribution diagrams

Cartesian

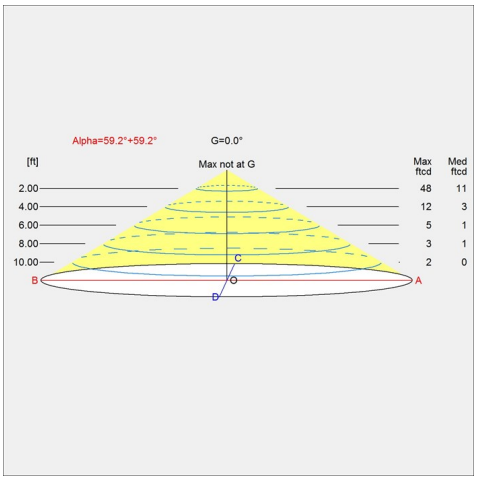

Isolux

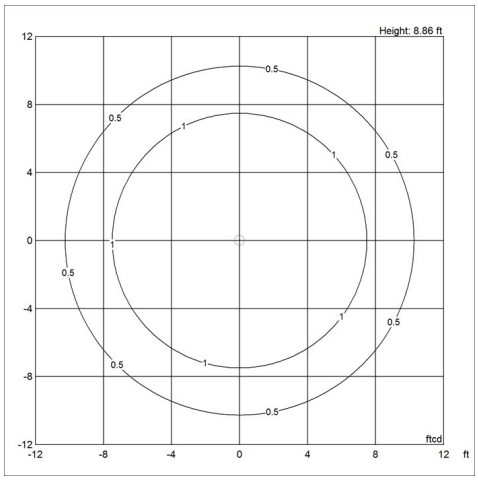
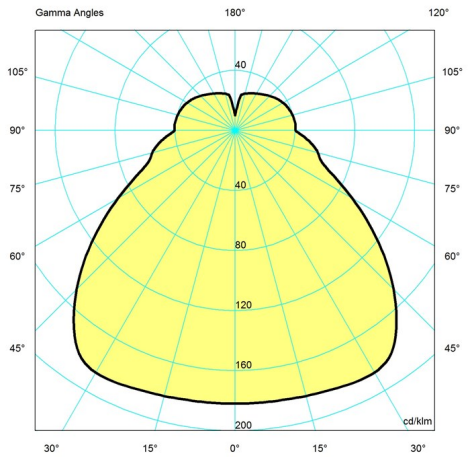
Polar